1 Allée des Bouleaux -F-95110 SANNOIS
+33 (0)1 39 98 55 00
info@restagraf.com

PLASTIC CABLE TIE 380 X 7,6 mm

Item code	Number of References	Number of pieces	Conditioning
2044	1	150	BAG
1463	1	12	BAG

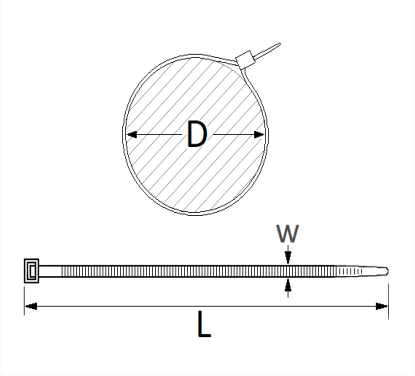

Technical informations	
L	380 mm
W	7.6 mm
D	5 → 105 mm

Materials
POLYAMIDE 6.6