1 Allée des Bouleaux -F-95110 SANNOIS
+33 (0)1 39 98 55 00
info@restagraf.com

# MOULDING CLIP Ø 8,4 mm FENDER FLARES

| Item code | Number of References | Number of pieces | Conditioning |
|---|---|---|---|
| 10815 | 1 | 8 | BAG |

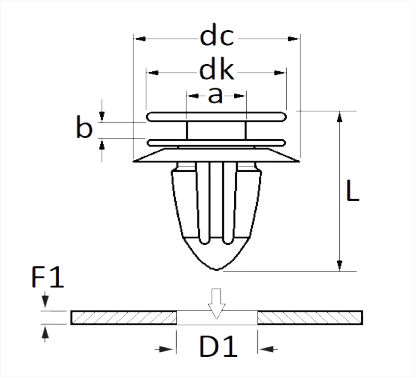


| Technical informations | |
|---|---|
| dk | 13.2 mm |
| dc | 20.5 mm |
| b | 2.7 mm |
| a | 4.9 mm |
| L | 18.5 mm |
| D1 | 8.4 mm |
| F1 | 0.8 mm |
| | |
| | |
| | |

| Materials |
|---|
| POLYACETAL COPOLYMER |

| Manufacturer correspondence* | | | |
|---|---|---|---|
| FORD Engineering number | W704309S300 | FORD Finis | 1038008 |

*Non contractual information given as indication