1 Allée des Bouleaux -F-95110 SANNOIS
+33 (0)1 39 98 55 00
info@restagraf.com

GRADE 8.8 ZINC PLATED HEXAGON HEAD MACHINE SCREW M6-1.00 X 50 mm DIN 933

Item code	Number of References	Number of pieces	Conditioning
7620	1	10	BAG
796	1	25	BAG
40113	1	100	TRUCK BOX

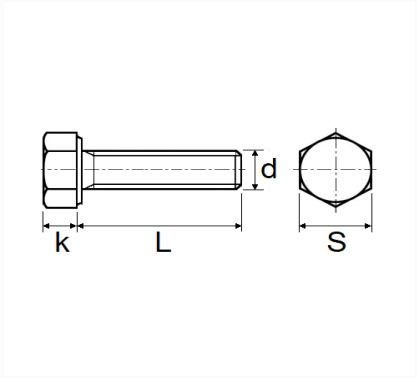

Technical informations	
s	10 mm
k	4 mm
L	50 mm
d	M6 x 1.00

Materials
CLASS 8.8 STEEL

Manufacturer correspondence*			
RENAULT	7703001132	RENAULT	7703101583

* Non contractual information given as indication