1 Allée des Bouleaux -F-95110 SANNOIS
+33 (0)1 39 98 55 00
info@restagraf.com

EXTERNAL SERRATED WASHER Ø 16 X 26 mm NFE 27-624 EXTERNAL SERRATED

Item code	Number of References	Number of pieces	Conditioning
568	1	25	BAG

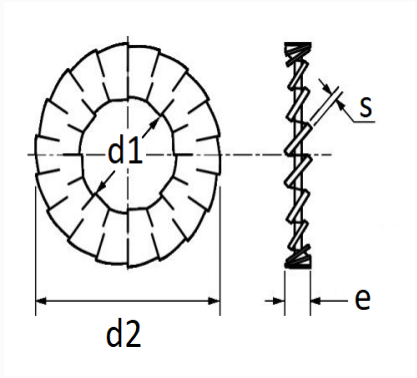

Technical informations	
d1	16.3 mm
d2	26 mm
e	3.3 mm
s	1.2 mm