1 Allée des Bouleaux -F-95110 SANNOIS
+33 (0)1 39 98 55 00
info@restagraf.com

AXIAL SELF RETAINING CLIP Ø 4 mm FOR SLICK AXIS

Item code	Number of References	Number of pieces	Conditioning
558	1	50	BAG

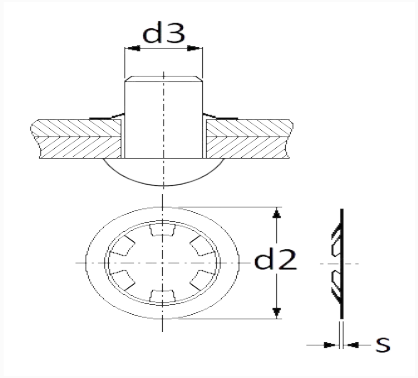

Technical informations	
d3	4 mm
d2	11.5 mm
s	0.3 mm

Materials

Manufacturer correspondence*			
CITROËN	26240019	OPEL (GM) Catalog number	1824601

Manufacturer correspondence*			
OPEL Part number	8941997	PEUGEOT / CITROËN	698798

* Non contractual information given as indication