1 Allée des Bouleaux -F-95110 SANNOIS
+33 (0)1 39 98 55 00
info@restagraf.com

DRAIN PLUG GASKET Ø 14 X 20 X 2 mm FLAT ALUMINIUM ALLOY

Item code	Number of References	Number of pieces	Conditioning
7347	1	10	BAG
40872	1	100	TRUCK BOX
227347	1	4	BLISTER

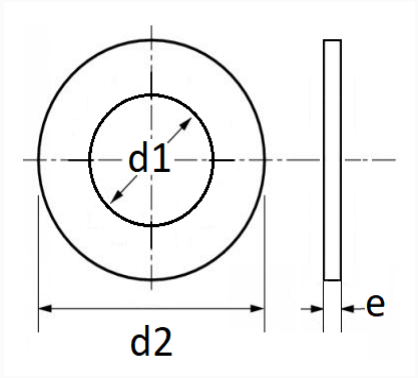

Technical informations	
d1	14 mm
d2	20 mm
e	2 mm

Materials
ALUMINUM

Manufacturer correspondence*			
ALTERNATIVE TO AUDI	N0138495	ALTERNATIVE TO FIAT	71741743

Manufacturer correspondence*			
ALTERNATIVE TO HYUNDAI	K995641400	ALTERNATIVE TO KIA	K995641400
ALTERNATIVE TO MAZDA	995641400	ALTERNATIVE TO MITSUBISHI	MN128168
ALTERNATIVE TO MITSUBISHI	MN195854	ALTERNATIVE TO OPEL	93193729
ALTERNATIVE TO SEAT	N0138495	ALTERNATIVE TO SKODA	N0138495
ALTERNATIVE TO SUZUKI	0916814015	ALTERNATIVE TO VOLKSWAGEN	N0138493
ALTERNATIVE TO VOLKSWAGEN	N0138494	ALTERNATIVE TO VOLKSWAGEN	N0138495
ALTERNATIVE TO VOLKSWAGEN	N0138498	HYUNDAI	2151321000
HYUNDAI	2151323000	HYUNDAI	2151323001
KIA	2151323001	MAZDA	995641400
MERCEDES-BENZ	A6369970244	RENAULT SAMSUNG MOTORS	0326010

* Non contractual information given as indication