1 Allée des Bouleaux -F-95110 SANNOIS
+33 (0)1 39 98 55 00
info@restagraf.com

CIRCLIP Ø 28 X 1,5 mm DIN 471 EXTERIOR

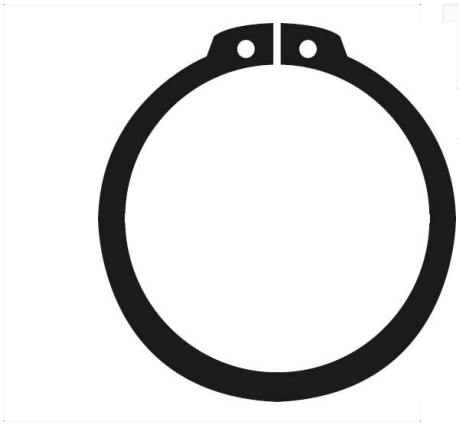

Item code	Number of References	Number of pieces	Conditioning
7315	1	10	BAG

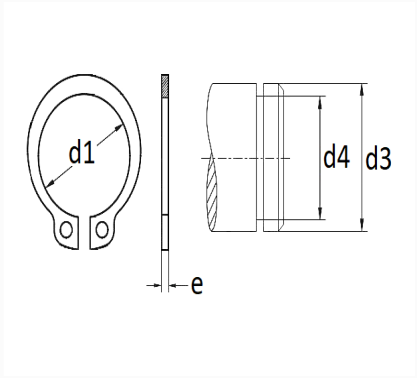

Technical informations	
d3	28 mm
d1	25.9 mm
d4	26.6 mm
e	1.5 mm

Materials
XC75 STEEL