1 Allée des Bouleaux -F-95110 SANNOIS
+33 (0)1 39 98 55 00
info@restagraf.com

DOUBLE SERRATED WASHER Ø 5 X 17,5 mm NFE 27-626 DUAL SERRATED

Item code	Number of References	Number of pieces	Conditioning
530	1	40	BAG

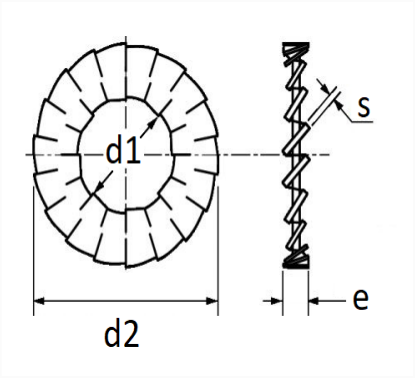

Technical informations	
d1	5.1 mm
d2	17.5 mm
e	1.9 mm
s	0.8 mm